SPECTRA 10" ROUND PENDANT
INSTALLATION INSTRUCTIONS
SP-SPC-1009

CAUTION
Turn off the main power at the circuit breaker before installing the fixture in order to prevent possible shock. If you are unfamiliar with proper electrical wiring connections, obtain the services of a qualified electrician.

GENERAL
Read all instructions carefully for safe operartion and installation.
All electrical connections must be in accordance with local and national electrical code (N.E.C.) standards. Remove the fixture and mounting package from the box. Make sure no parts are missing by referencing the illustrations on these Installation Instructions.
Please contact Blackjack Lighting at 847-941-0588 if any parts are missing or damaged.
This product is suitable for DAMP locations.

PREPARATION

1. Remove the fixture from its box. Carefully unpack the bundled wire packages. Be careful not to bend or kink wires when unpacking. Remove the additional package with the decorative color gel light guides(16-19).

2. Remove the ceiling plate(10) from the canopy cover(11) by loosening the three thumbscrews(12).

MOUNTING

3. Pull the supply wires(2&4) and the house ground wire(6) out of the outlet box(1) and thread them through the large center hole in ceiling plate(10).

4. Place the ceiling plate(10) over the outlet box(1). Then insert the mounting screws(9) through the slots in the ceiling plate(9), then tightly secure the mounting screws(9) into the outlet box(1).

5. Temporarily suspend the canopy cover(11) from the ceiling plate(10) by attaching the support wire loops(14) to the mating hooks(13).

ELECTRICAL CONNECTIONS

6. Using the wire connectors(8), connect the white supply wire(2) to the white fixture wire(3); connect the black supply wire(4) to the black fixture wire(5); and connect the house ground wire(6) to the fixture ground wire(7). Carefully tuck all the wires back into the outlet box(1).

FINAL ASSEMBLY

7. To install the light guides first screw the color gel(18) into the socket(17), then screw the short frosted light guide(19) into the color gel(18).

8. Determine the appropriate length of each suspension cable (if in doubt about exact length needed, leave a little extra cable until the final installation of the canopy cover(11)). Push the excess cable up into the canopy by pressing the small barrel of the gripper(15) upward. This will release the cable tension and allow the suspended cable to be pulled through gripper(15). Roll the excess cable into a small loop inside the canopy. Wrap the supplied Velcro strap around the cable loop to keep the excess cable from falling outside of the canopy cover (11).

9. Make sure all of the cables are carefully placed inside canopy cover (11). To secure the canopy cover(11) to the ceiling plate(10) align the holes on the side of the canopy cover(11) with the holes on the side of the ceiling plate(10). Then insert and tighten the three thumbscrews(12).

10. Once the canopy(11) is in place, fine tune the cable lengths longer or shorter using the adjustable gripper(15) until light guides(16-19) are adjusted to their preferred lengths.

11. Once the length of each cable has been established, any remaining bends or kinks in the wire can be straightened by bending out the kinks by hand while heating the cord up with the warm air from a hair dryer or heat gun.

DIMMING: Fixture Dimming Type: TRIAC, ELV, 0-10V dimmable. For recommended dimmers see blackjacklighting.com

Blackjack Lighting reserves the right to change, modify or upgrade our products without notice. © 2026 Blackjack Lighting LLC
tel: **(847) 941-0588** email: **sales@blackjacklighting.com** web: **Blackjacklighting.com**

HARDWARE

Wire Connector (#8)
(3) Included

Mounting Screw (#9)
(2) Included

Thumbscrew (#12)
(3) Included

(1)

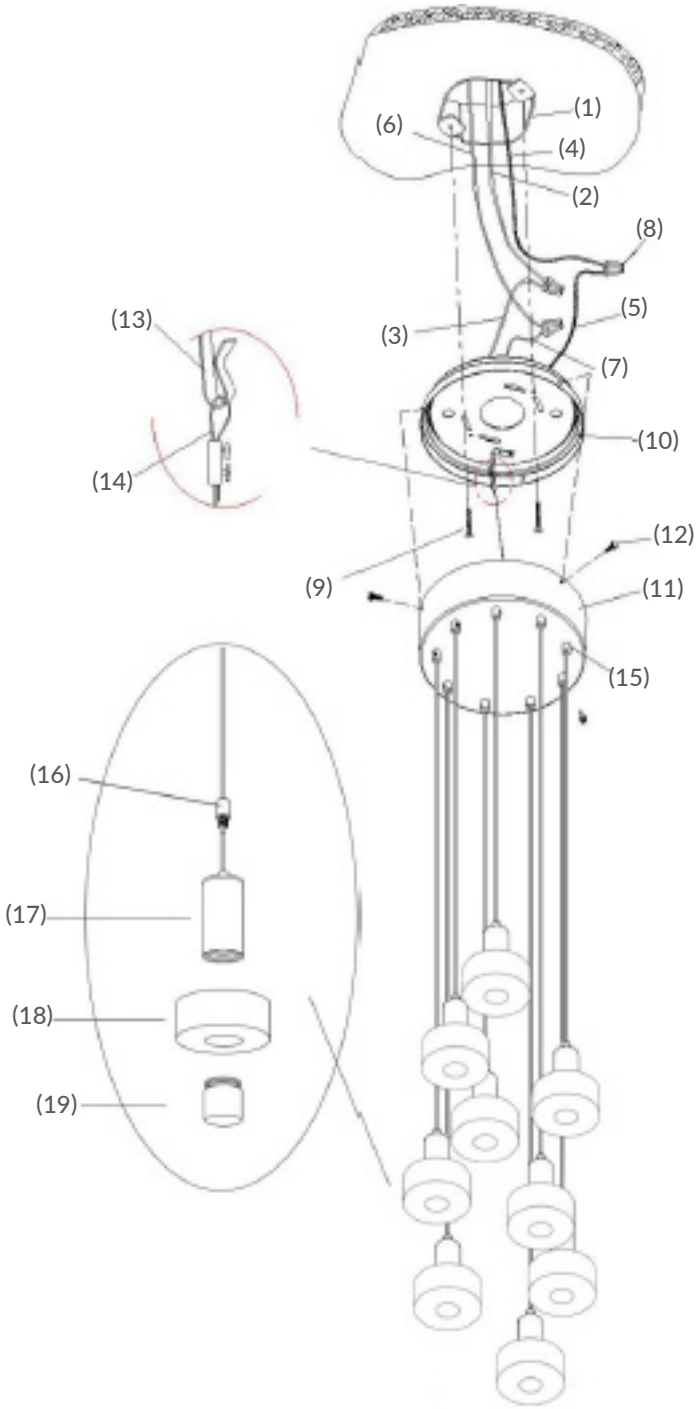

1. OUTLET BOX (by others)
2. WHITE SUPPLY WIRE
3. WHITE FIXTURE WIRE
4. BLACK SUPPLY WIRE
5. BLACK FIXTURE WIRE
6. HOUSE GROUND WIRE
7. FIXTURE GROUND WIRE
8. WIRE CONNECTORS
9. MOUNTING SCREWS
10. CEILING PLATE
11. CANOPY COVER
12. THUMBSCREWS
13. HOOK
14. LOOP
15. GRIPPER
16. LIGHT GUIDE GRIPPER
17. SOCKET
18. COLOR GEL
19. LIGHT GUIDE

Blackjack Lighting reserves the right to change, modify or upgrade our products without notice. © 2026 Blackjack Lighting LLC
tel: **(847) 941-0588** email: **sales@blackjacklighting.com** web: **Blackjacklighting.com**